3C100G

Type	RPM	Stand by (kW/HP)	Prime power (kW/HP)
3C100LWG-D	1800	10.0[13.4]	9.0[12.1]
3C100LWG-E	3000	15.0[20.1]	13.5[18.1]
3C100LWG-U	3600	16.4[22.0]	14.8[19.8]

◎ GENERAL ENGINE DATA

► Emission Level	3C100LWG-U only : TIER4 NTE
► Engine Type	3-Cylinder, 4-Cycle, In-line, Diesel, Water cooled, N/A
► Bore x Stroke	Ø75 x 76 mm
► Displacement	1.007 liters
► Compression Ratio	21:1
► Combustor Type	In-Direct Injection(Swirl Chamber)
► Rotation	Counter clockwise viewed from Flywheel
► Dimension (L x W x H)	554.9 x 484.4 x 552.8 mm
► Dry Weight	100kg (with Fan)
► Aspiration	N/A
► Governor Type	Mechnical Centrifugal
► Injection timing	-D(14˚ BTDC), -E(18˚ BTDC), -U(20˚ BTDC)
► Alternator Capacity	12V-75A
► Firing order	1-2-3
► Flywheel housing	SAE No.5
► Flywheel	Clutch No.7-1/2
► Fuel Consumption Rate(at rated power)	Below 275g/kWh(205g/HPh)

◆ ENGINE DIMENSION

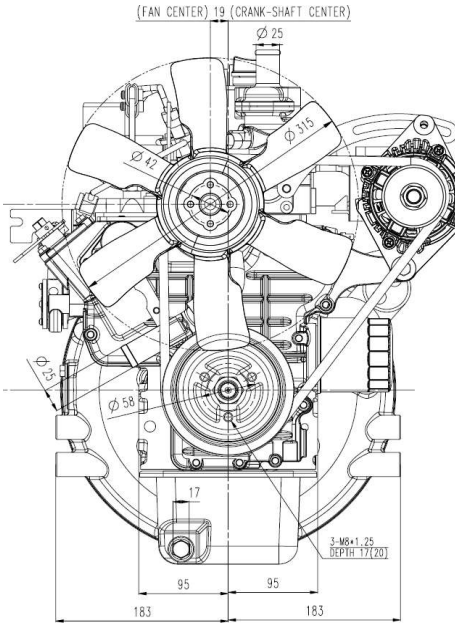

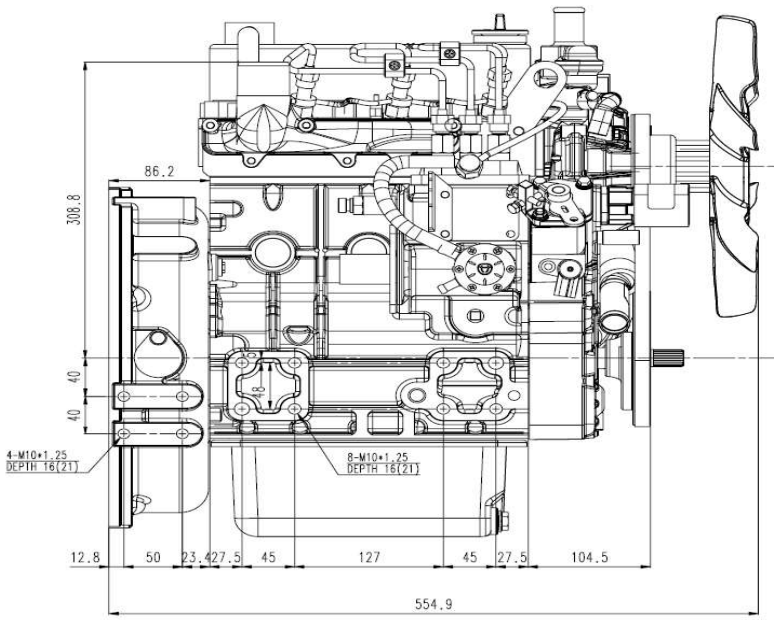

Designation	Length(L)	Width(W)	Height(H)	Dry weight
Value	554.9	484.4	552.8	100kg

3C100EG

Type	RPM	Stand by (kW/HP)	Prime power (kW/HP)
3C100LWEG-E1	1500	8.0[10.7]	7.2[9.7]
3C100LWEG-U1	1800	10.0[13.4]	9.0[12.1]
3C100LWEG-E	3000	16.4[22.0]	14.8[19.8]
3C100LWEG-U	3600	16.4[22.0]	14.8[19.8]

◎ GENERAL ENGINE DATA

► Emission Level	3C100LWEG-U, 3C100LWEG-U1 : TIER4 NTE
► Engine Type	3-Cylinder, 4-Cycle, In-line, Diesel, Water cooled, N/A
► Bore x Stroke	Ø75 x 76 mm
► Displacement	1.007 liters
► Compression Ratio	21:1
► Combustor Type	In-Direct Injection(Swirl Chamber)
► Rotation	Counter clockwise viewed from Flywheel
► Dimension (L x W x H)	554.9 x 484.4 x 552.8 mm
► Dry Weight	100kg (with Fan)
► Aspiration	N/A
► Governor Type	**Electric Control (ECU)**
► Injection timing	-U1,-E1(14˚ BTDC), -U,E(20˚ BTDC)
► Alternator Capacity	12V-75A
► Firing order	1-2-3
► Flywheel housing	SAE No.5
► Flywheel	Clutch No.7-1/2
► Fuel Consumption Rate(at rated power)	Below 275g/kWh(205g/HPh)

◆ ENGINE DIMENSION

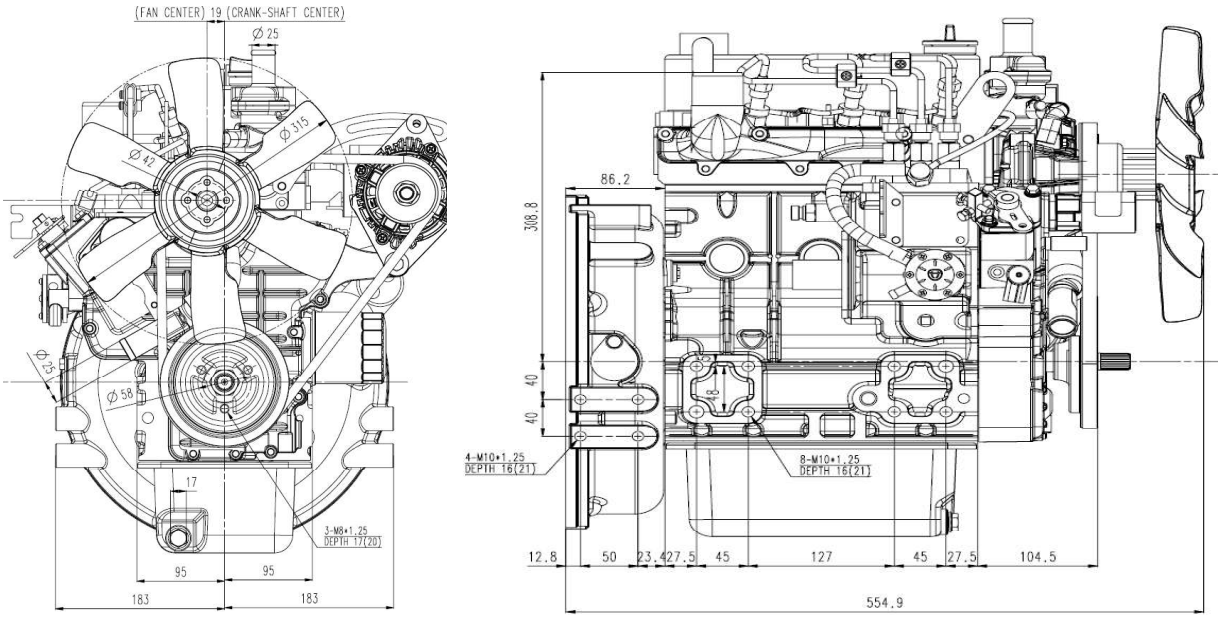

Designation	Length(L)	Width(W)	Height(H)	Dry weight
Value	554.9	484.4	552.8	100kg

3A165G

Type	RPM	Stand by (kW/HP)	Prime power (kW/HP)
3A165LWG	1800	18.0[24.1]	16.2[21.7]

◎ GENERAL ENGINE DATA

► Emission Level	-
► Engine Type	3-Cylinder, 4-Cycle, In-line, Diesel, Water cooled, N/A
► Bore x Stroke	Ø87 x 92.4 mm
► Displacement	1.647 liters
► Compression Ratio	21.7 : 1
► Combustor Type	In-Direct Injection(Swirl Chamber)
► Rotation	Counter clockwise viewed from Flywheel
► Dimension (L x W x H)	615 x 495 x 656 mm
► Dry Weight	175kg (with Fan)
► Aspiration	N/A
► Governor Type	Mechnical Centrifugal
► Injection timing	14˚ BTDC
► Alternator Capacity	12V-75A
► Firing order	1-2-3
► Flywheel housing	SAE No.4
► Flywheel	Clutch No.7-1/2
► Fuel Consumption Rate(at rated power)	Below 268g/kWh(200g/HPh)

◆ ENGINE DIMENSION

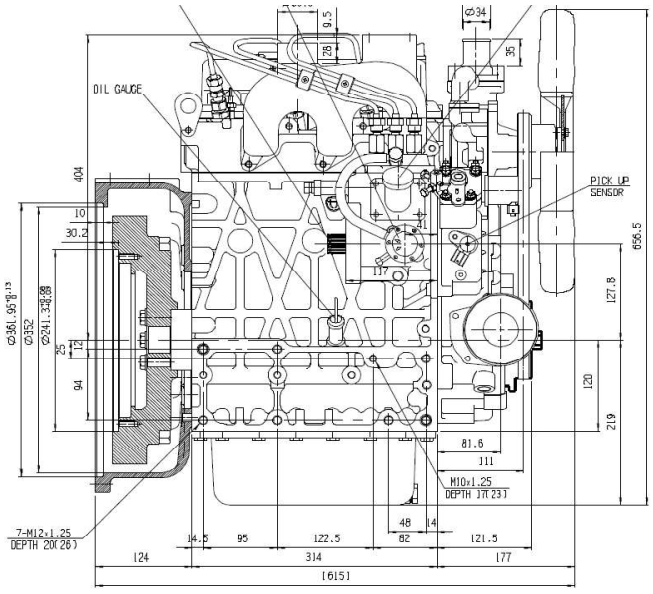

Designation	Length(L)	Width(W)	Height(H)	Dry weight
Value	615	495	656	175kg

3A165EG

Type	RPM	Stand by (kW/HP)	Prime power (kW/HP)
3A165LWEG-E	1500	15.0[20.1]	13.5[18.1]
3A165LWEG	1800	18.0[24.1]	16.2[21.7]
3A165LFG-U	1800	18.0[24.1]	16.2[21.7]

◎ GENERAL ENGINE DATA

► Emission Level	3A165LFG-U only : TIER4 NTE
► Engine Type	3-Cylinder, 4-Cycle, In-line, Diesel, Water cooled, N/A
► Bore x Stroke	Ø87 x 92.4 mm
► Displacement	1.647 liters
► Compression Ratio	21.7 : 1
► Combustor Type	In-Direct Injection(Swirl Chamber)
► Rotation	Counter clockwise viewed from Flywheel
► Dimension (L x W x H)	615 x 495 x 656 mm
► Dry Weight	175kg (with Fan)
► Aspiration	N/A
► Governor Type	**Electric Control (ECU)**
► Injection timing	14˚ BTDC
► Alternator Capacity	12V-75A
► Firing order	1-2-3
► Flywheel housing	SAE No.4
► Flywheel	Clutch No.7-1/2
► Fuel Consumption Rate(at rated power)	Below 268g/kWh(200g/HPh)

◆ ENGINE DIMENSION

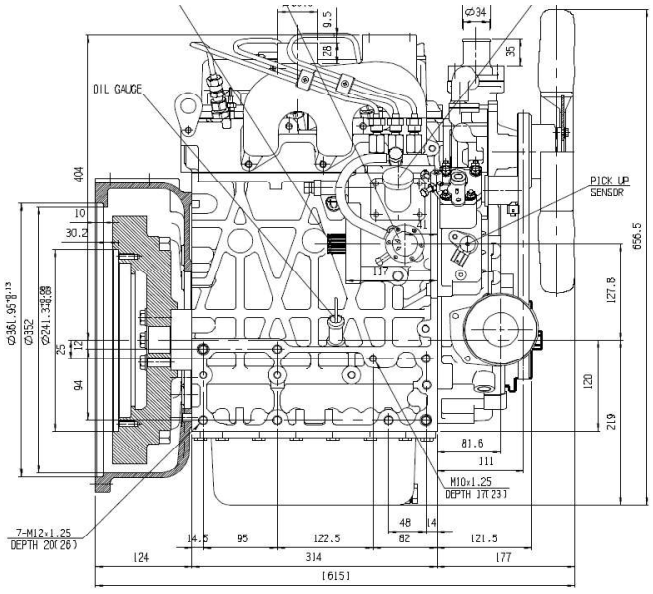

Designation	Length(L)	Width(W)	Height(H)	Dry weight
Value	615	495	656	175kg

4A220EG

Type	RPM	Stand by (kW/HP)	Prime power (kW/HP)
4A220LWEG-E	1500	18.0[24.1]	16.2[21.7]
4A220LWEG	1800	24.0[32.2]	21.6[29.0]

◎ GENERAL ENGINE DATA

► Emission Level	-
► Engine Type	4-Cylinder, 4-Cycle, In-line, Diesel, Water cooled, N/A
► Bore x Stroke	Ø87 x 92.4 mm
► Displacement	2.197 liters
► Compression Ratio	21.7:1
► Combustor Type	In-Direct Injection(Swirl Chamber)
► Rotation	Counter clockwise viewed from Flywheel
► Dimension (L x W x H)	766 x 495 x 669 mm
► Dry Weight	207kg (with Fan)
► Aspiration	N/A
► Governor Type	**Electric Control (ECU)**
► Injection timing	14˚ BTDC
► Alternator Capacity	12V-75A
► Firing order	1-3-4-2
► Flywheel housing	SAE No.4
► Flywheel	Clutch No.7-1/2
► Fuel Consumption Rate(at rated power)	Below 268g/kWh(200g/HPh)

◆ ENGINE DIMENSION

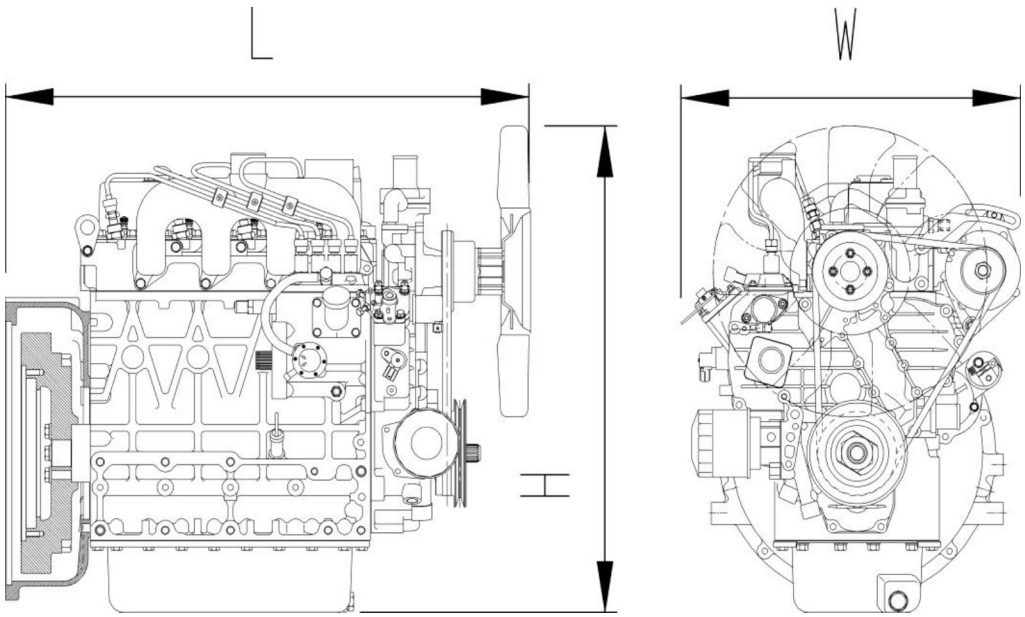

Designation	Length(L)	Width(W)	Height(H)	Dry weight
Value	766mm	495mm	669mm	207kg

4B243TG

Type	RPM	Stand by (kW/HP)	Prime power (kW/HP)
4B243TLWG-D	1800	30.0[40.2]	27.0[36.2]

◎ GENERAL ENGINE DATA

► Emission Level	-
► Engine Type	4-Cylinder, 4-Cycle, Diesel, Water cooled, Turbo
► Bore x Stroke	Ø87 x 102.4 mm
► Displacement	2.435 liters
► Compression Ratio	21.4:1
► Combustor Type	In-Direct Injection(Swirl Chamber)
► Rotation	Counter clockwise viewed from Flywheel
► Dimension (L x W x H)	766 x 545 x 714 mm
► Dry Weight	214kg (with Fan)
► Aspiration	N/A
► Governor Type	Mechnical Centrifugal
► Injection timing	18˚ BTDC
► Alternator Capacity	12V-75A
► Firing order	1-3-4-2
► Flywheel housing	SAE No.4
► Flywheel	Clutch No.7-1/2
► Fuel Consumption Rate(at rated power)	Below 268g/kWh(200g/HPh)

◆ ENGINE DIMENSION

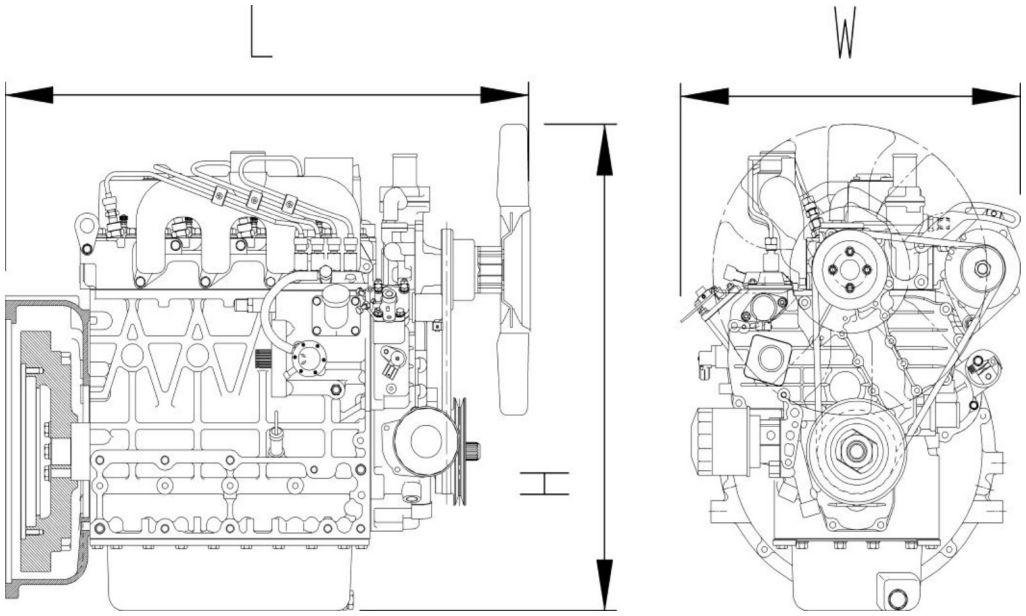

Designation	Length(L)	Width(W)	Height(H)	Dry weight
Value	766mm	545mm	714mm	214kg

4B243TEG

Type	RPM	Stand by (kW/HP)	Prime power (kW/HP)
4B243TLWEG-E	1500	25.0[33.5]	22.5[30.2]
4B243TLWEG-D	1800	30.0[40.2]	27.0[36.2]

◎ GENERAL ENGINE DATA

► Emission Level	-
► Engine Type	4-Cylinder, 4-Cycle, Diesel, Water cooled, Turbo
► Bore x Stroke	Ø87 x 102.4 mm
► Displacement	2.435 liters
► Compression Ratio	21.4:1
► Combustor Type	In-Direct Injection(Swirl Chamber)
► Rotation	Counter clockwise viewed from Flywheel
► Dimension (L x W x H)	766 x 545 x 714 mm
► Dry Weight	214kg (with Fan)
► Aspiration	N/A
► Governor Type	**Electric Control (ECU)**
► Injection timing	18˚ BTDC
► Alternator Capacity	12V-75A
► Firing order	1-3-4-2
► Flywheel housing	SAE No.4
► Flywheel	Clutch No.7-1/2
► Fuel Consumption Rate(at rated power)	Below 268g/kWh(200g/HPh)

◆ ENGINE DIMENSION

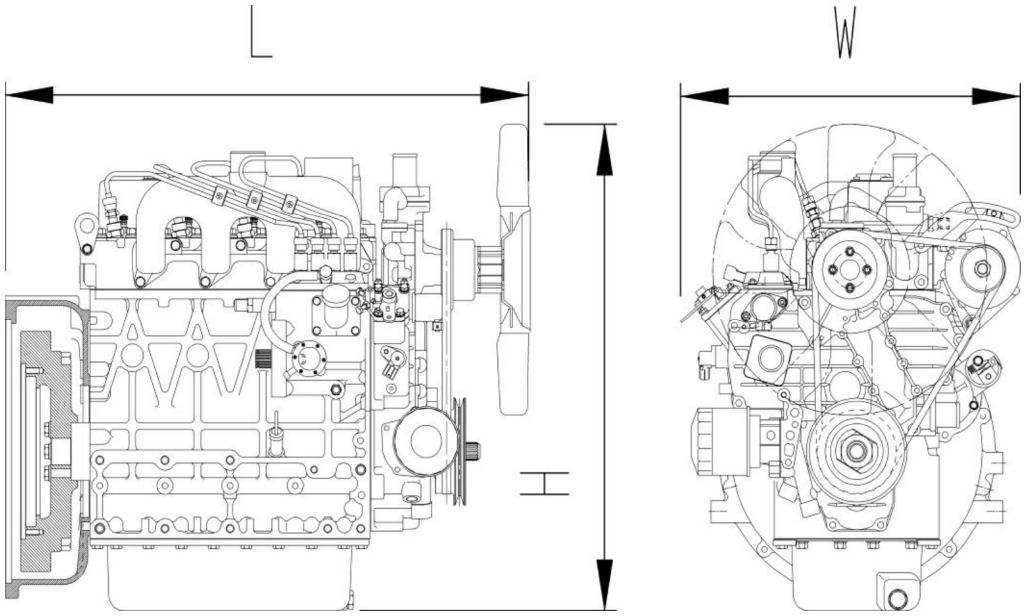

Designation	Length(L)	Width(W)	Height(H)	Dry weight
Value	766mm	545mm	714mm	214kg